DATA SHEET

PCR Strips

ISO9001

Features

Suitable for 0.1/0.2mL thermal cycler systems.

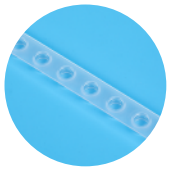

The surface of the tube cover is smooth, which is conducive to marking.

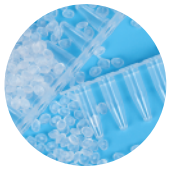

Ultra-smooth, uniform, thin-walled polypropylene tubes for optimum PCR and real-time (RT-qPCR) results.

Reduction in evaporation loss due to tightly closing cap strips.

DNase RNase and DNA free, No human DNA, endotoxin free.

Produced in a 100,000-level dust-free workshop.

Raw Material

Manufactured of virgin Polypropylene (PP) using diamond polished molds.

We Open To New Ideas!

Application

PCR strips allow scientists working with cyclers and enzymes to gain enhanced PCR yield through a faster transmission of heat from block to the reaction. It offers better control over the reaction while speeding up the process with high heating and cooling rates.

SHAOXING GENFOLLOWER BIOTECH CO.,LTD.

Add: Eastern industrial park, Baiguan street, Shangyu district, Shaoxing city, Zhejiang province, China
Email: GenFollower@Genfollower.com
Web: www.GenFollower.com
Fax: +86-575-82032762
Tel: +86-575-82936953

GenFollower®

DATA SHEET

PCR Strips

ISO9001

Product Range

Cat.#	Description	Packaging
PCR Tube Strips		
B8LT-01N	0.1mL / 0.2mL, Low profile G2 PCR 8 tube strip, No cap, Nature, sterile, RNase and DNase free	125 PCS/Box, 10 Boxes/Case
B8LT-01W	0.1mL / 0.2mL, Low profile G2 PCR 8 tube strip, No cap, White, sterile, RNase and DNase free	125 PCS/Box, 10 Boxes/Case
B8RT-02N	0.2mL, Regular profile G2 PCR 8 tube strip, No cap, Nature, sterile, RNase and DNase free	125 PCS/Box, 10 Boxes/Case
B8RT -02W	0.2mL, Regular profile G2 PCR 8 tube strip, No cap, White, sterile, RNase and DNase free	125 PCS/Box, 10 Boxes/Case
B12LT-01N	0.1mL / 0.2mL, Low profile G2 PCR 12 tube strip, No cap, Nature, sterile, RNase and DNase free	125 PCS/Box, 10 Boxes/Case
B12LT-01W	0.1mL / 0.2mL, Low profile G2 PCR 12 tube strip, No cap, Nature, sterile, RNase and DNase free	125 PCS/Box, 10 Boxes/Case
B12RT-02N	0.2mL, Regular profile G2 PCR 12 tube strip, No cap, Nature, sterile, RNase and DNase free	125 PCS/Box, 10 Boxes/Case
B12RT-02W	0.2mL, Regular profile G2 PCR 12 tube strip, No cap, White, sterile, RNase and DNase free	125 PCS/Box, 10 Boxes/Case
PCR8WC-02N	0.2mL PCR 8 tube strip with individual caps, Nature, sterile, RNase and DNase free	125 PCS/Box, 10 Boxes/Case
PCR Cap Strips		
PCR-B8GC	G2 PCR 8 cap strip, No tube, Optical, Nature, sterile, RNase and DNase free	125 PCS/Box, 10 Boxes/Case
PCR-B12GC	G2 PCR 12 cap strip, No tube, Optical, Nature, sterile, RNase and DNase free	125 PCS/Box, 10 Boxes/Case

Color

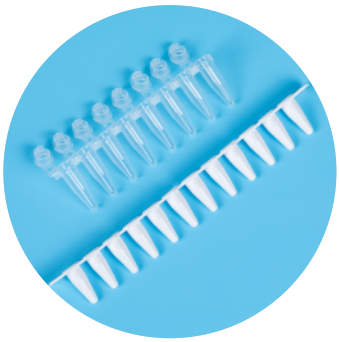

Tube strips: Clear & White

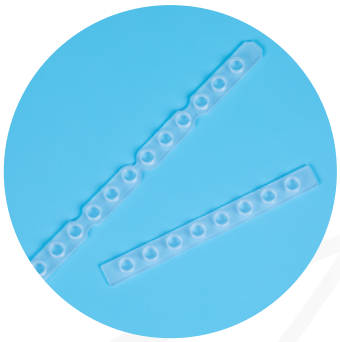

Cap strips: Clear

SHAOXING GENFOLLOWER BIOTECH CO.,LTD.

Add: Eastern industrial park, Baiguan street, Shangyu district,
Shaoxing city, Zhejiang province, China
Email: GenFollower@Genfollower.com
Web: www.GenFollower.com
Fax: +86-575-82032762
Tel: +86-575-82936953

GenFollower®

DATA SHEET

PCR 8 Tube & Cap Strips

ISO9001

Technical Drawing - B8LT-01N+B8LT-01W

- Cap -

PCR-B8GC

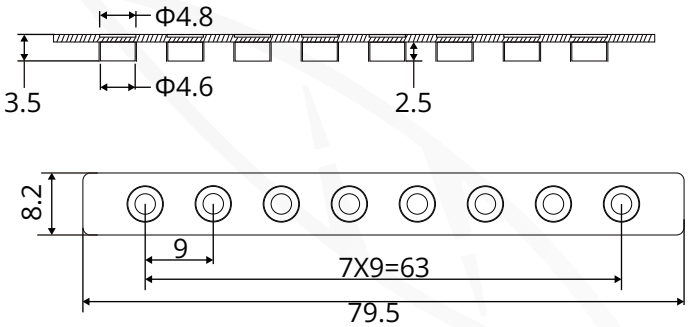

- Tube -

B8LT-01N

B8LT-01W

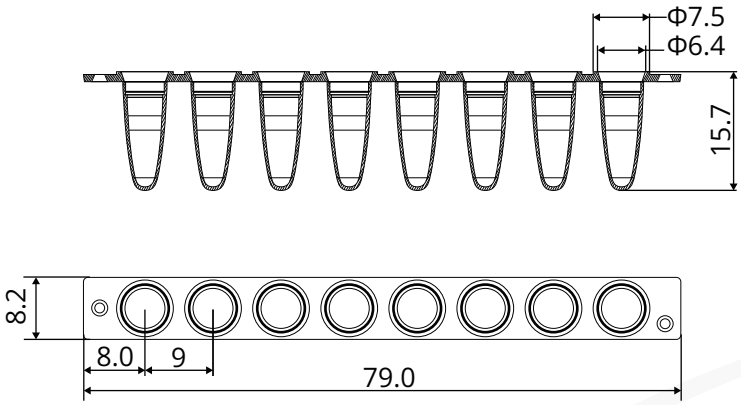

(Unit: mm)

SHAOXING GENFOLLOWER BIOTECH CO.,LTD.

Add: Eastern industrial park, Baiguan street, Shangyu district, Shaoxing city, Zhejiang province, China

Email: GenFollower@Genfollower.com

Web: www.GenFollower.com

Fax: +86-575-82032762

Tel: +86-575-82936953

GenFollower®

DATA SHEET

PCR 8 Tube & Cap Strips

ISO9001

Technical Drawing - B8RT-02N+B8RT-02W

- Cap -

PCR-B8GC

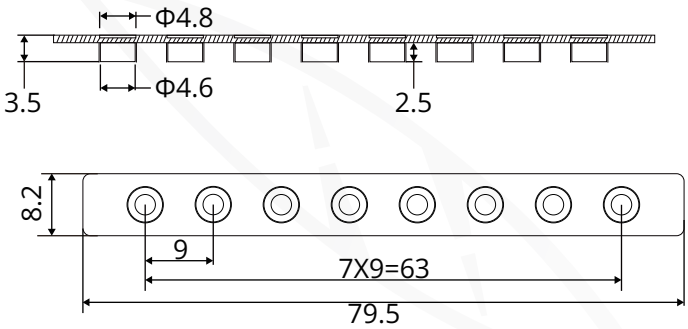

- Tube -

B8RT-02N
B8RT-02W

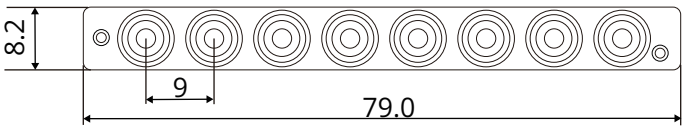

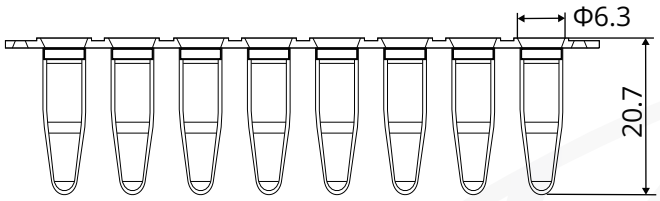

(Unit: mm)

SHAOXING GENFOLLOWER BIOTECH CO.,LTD.

Add: Eastern industrial park, Baiguan street, Shangyu district,
Shaoxing city, Zhejiang province, China
Email: GenFollower@Genfollower.com
Web: www.GenFollower.com
Fax: +86-575-82032762
Tel: +86-575-82936953

GenFollower®

DATA SHEET

PCR 12 Tube & Cap Strips

ISO9001

Technical Drawing - B12LT-01N+B12LT-01W

- Cap -
PCR-B12GC

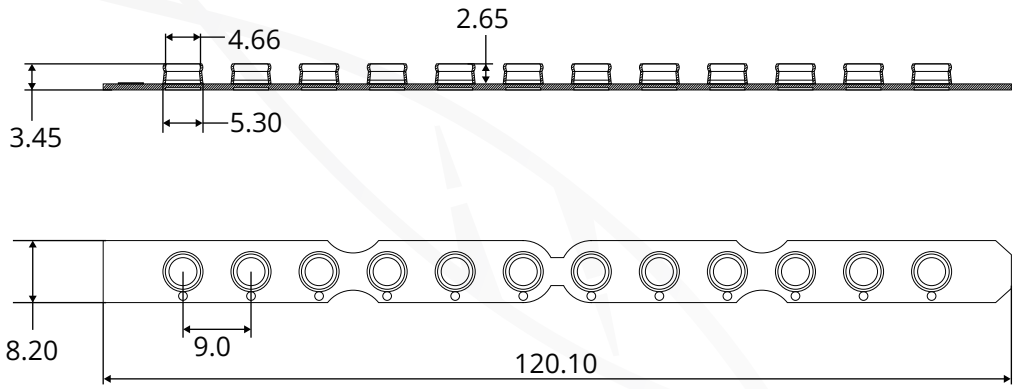

- Tube -
B12LT-01N
B12LT-01W

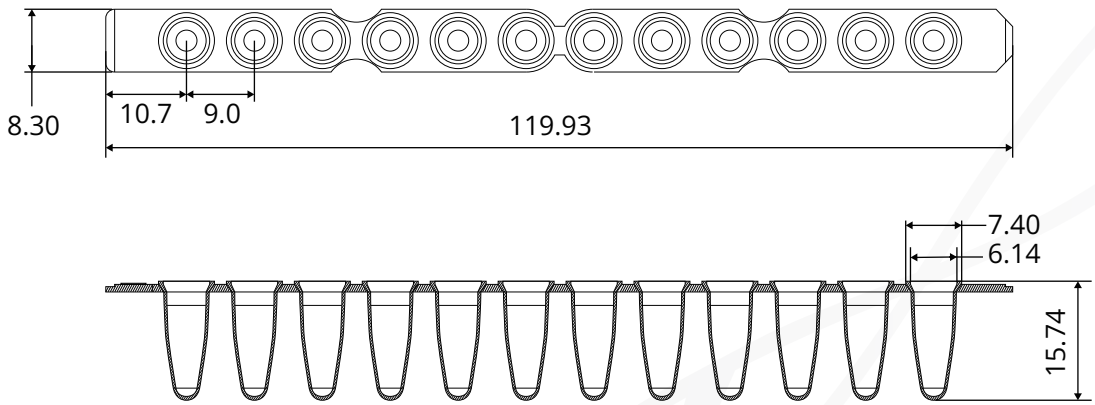

(Unit: mm)

SHAOXING GENFOLLOWER BIOTECH CO.,LTD.

Add: Eastern industrial park, Baiguan street, Shangyu district,
Shaoxing city, Zhejiang province, China
Email: GenFollower@Genfollower.com
Web: www.GenFollower.com
Fax: +86-575-82032762
Tel: +86-575-82936953

GenFollower®

DATA SHEET

PCR 12 Tube & Cap Strips

ISO9001

Technical Drawing - B12RT-02N+B12RT-02W

- Cap -
PCR-B12GC

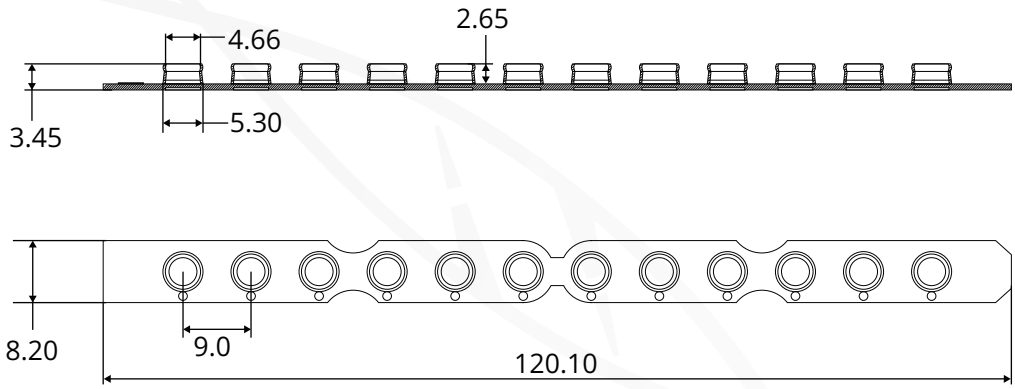

- Tube -
B12RT-02N
B12RT-02W

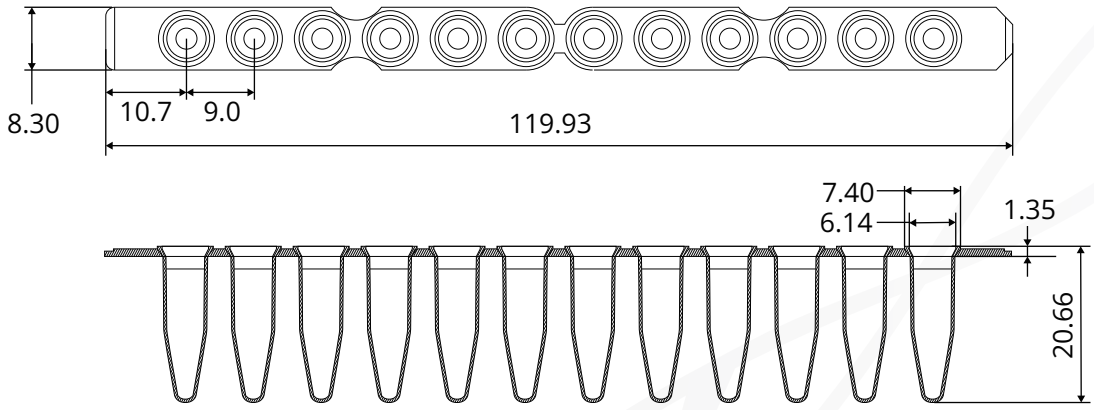

(Unit: mm)

SHAOXING GENFOLLOWER BIOTECH CO.,LTD.

Add: Eastern industrial park, Baiguan street, Shangyu district,
Shaoxing city, Zhejiang province, China
Email: GenFollower@Genfollower.com
Web: www.GenFollower.com
Fax: +86-575-82032762
Tel: +86-575-82936953

GenFollower®

DATA SHEET

ISO9001

PCR 8 Tube Strip with Individual Caps

Technical Drawing - PCR8WC-02N

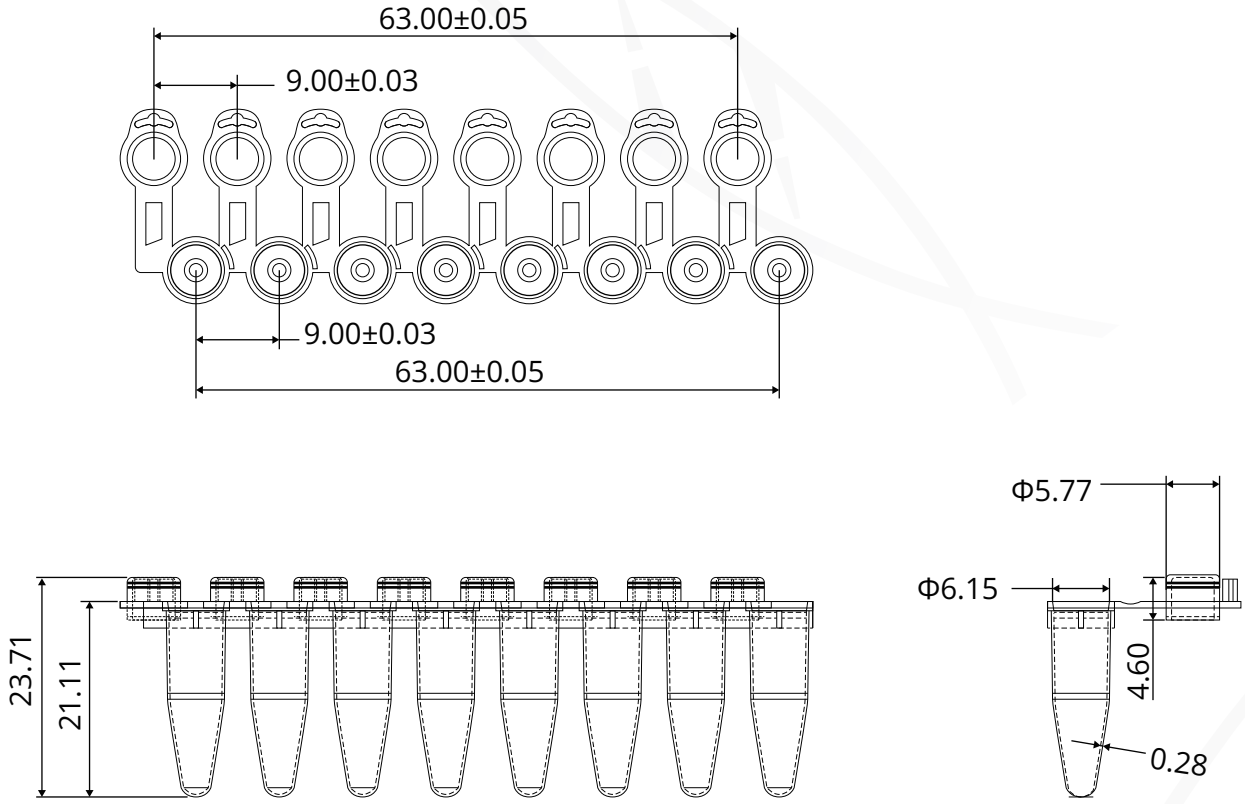

(Unit: mm)

SHAOXING GENFOLLOWER BIOTECH CO.,LTD.

Add: Eastern industrial park, Baiguan street, Shangyu district,
Shaoxing city, Zhejiang province, China
Email: GenFollower@Genfollower.com
Web: www.GenFollower.com
Fax: +86-575-82032762
Tel: +86-575-82936953

GenFollower®

DATA SHEET

PCR 4 Tube Strips

ISO9001

Features

Well compatible with Qiagen Rotor-Gene instruments.

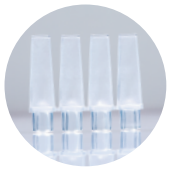

Frosted cap extensions allow easy handling and labeling.

Easy snap and lock Caps provide leak-free seals for reduced evaporation.

Ultra-smooth, uniform, thin-walled polypropylene tubes for optimum PCR and real-time (RT-qPCR) results.

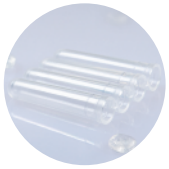

DNase RNase and DNA free, No human DNA, endotoxin free.

Produced in a 100,000-level dust-free workshop.

Raw Material

Manufactured of virgin Polypropylene (PP) using diamond polished molds.

We Open To New Ideas!

Application

0.1mL PCR 4 tube strips are specifically designed for use with the Qiagen Rotor-gene system. There are 4 tubes per strip and 4 caps per strip. For use in pharmaceutical industry, food industry, and molecular biology.

SHAOXING GENFOLLOWER BIOTECH CO.,LTD.

Add: Eastern industrial park, Baiguan street, Shangyu district, Shaoxing city, Zhejiang province, China
Email: GenFollower@Genfollower.com
Web: www.GenFollower.com
Fax: +86-575-82032762
Tel: +86-575-82936953

GenFollower®

DATA SHEET

PCR 4 Tube Strips

ISO9001

Product Range

Volume	Description	Packaging
PCR4RG	0.1mL PCR 4 tube strip with separate cap strip, Nature, sterile, DNase and RNase free	250 Kits/Box, 10 Boxes/Case

Technical Drawing - Cap

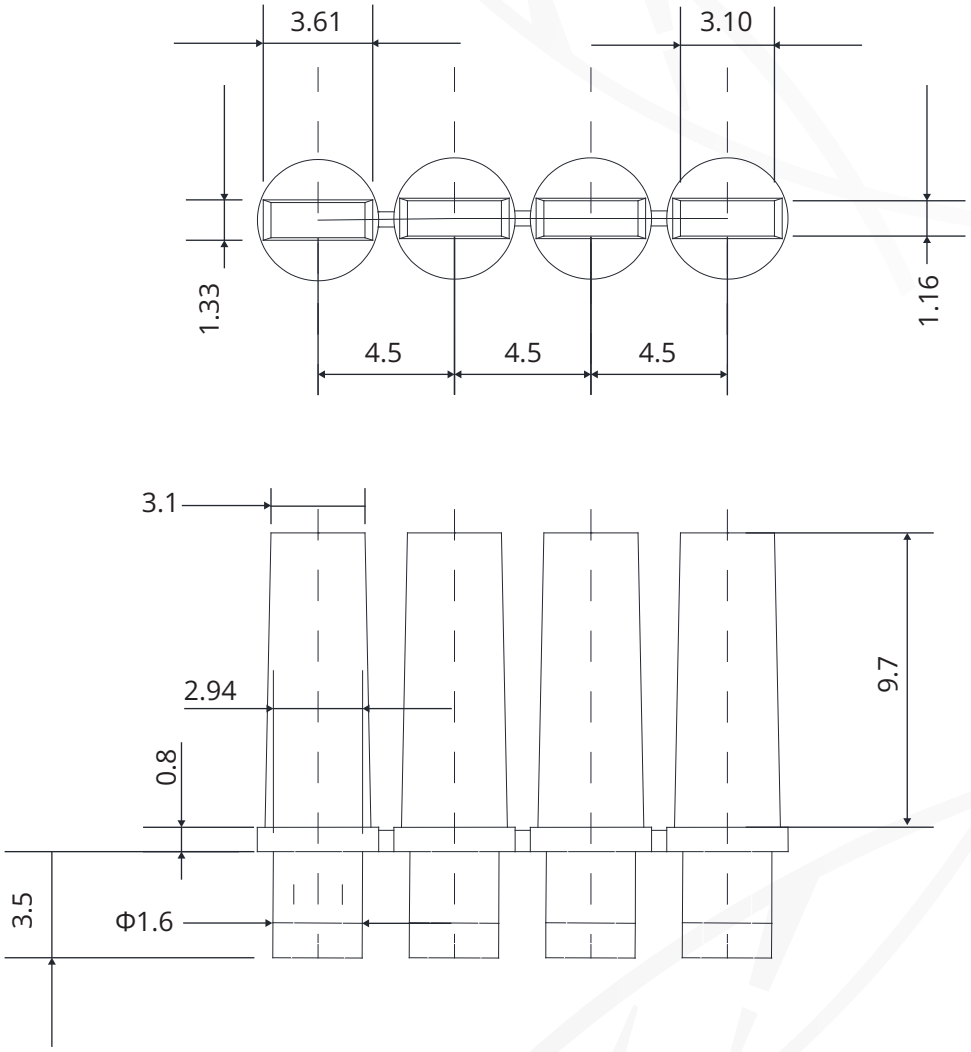

(Unit: mm)

SHAOXING GENFOLLOWER BIOTECH CO.,LTD.

Add: Eastern industrial park, Baiguan street, Shangyu district, Shaoxing city, Zhejiang province, China
Email: GenFollower@Genfollower.com
Web: www.GenFollower.com
Fax: +86-575-82032762
Tel: +86-575-82936953

GenFollower®

DATA SHEET

PCR 4 Tube Strips

ISO9001

Technical Drawing - Tube

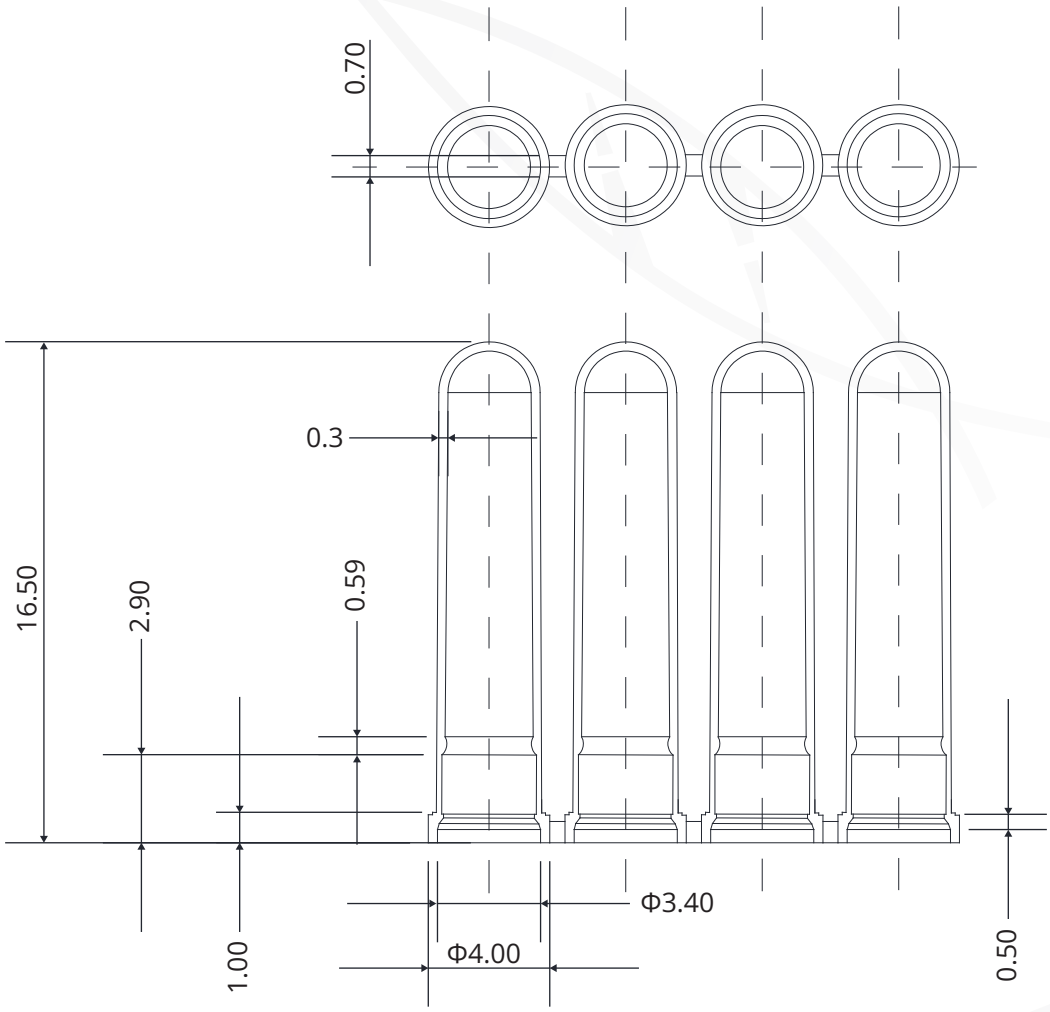

(Unit: mm)

SHAOXING GENFOLLOWER BIOTECH CO.,LTD.

Add: Eastern industrial park, Baiguan street, Shangyu district, Shaoxing city, Zhejiang province, China
Email: GenFollower@Genfollower.com
Web: www.GenFollower.com
Fax: +86-575-82032762
Tel: +86-575-82936953

GenFollower®